Features

- **Low Insertion Loss:** 0.35 dB @ 2.5 GHz
  0.55 dB @ 5.8 GHz
- **Isolation:** 27.0 dB @ 2.5 GHz
  25.0 dB @ 5.8 GHz
- **Low DC Power Consumption**
- **Miniature LUSON6L (1.0x1.0x0.4 mm) Using Lead (Pb) free materials with RoHS compliant**
- **PHEMT process**

LUSON6L (1.0x1.0X0.4 mm)

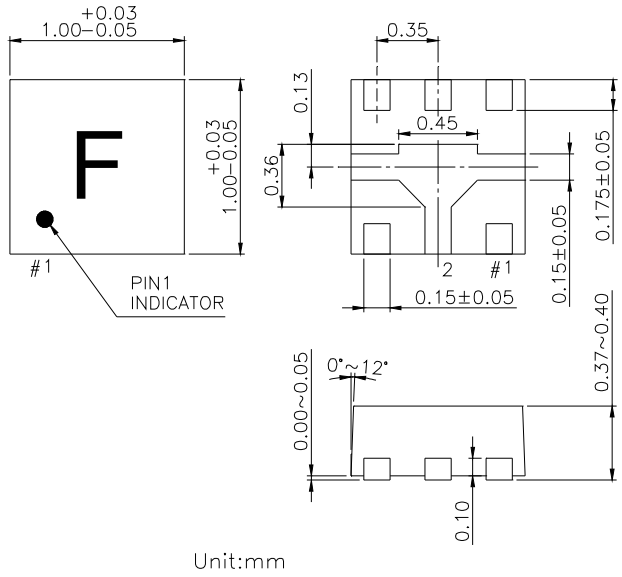

Description

The HWS541 is a GaAs PHEMT MMIC SPDT switch operating at 2.0-6.0 GHz in a low cost miniature LUSON6L (1.0x1.0x0.4 mm) plastic lead (Pb) free package. The HWS541 features low insertion loss and high isolation with very low DC power consumption. This switch can be used in WiMAX or IEEE 802.11a/b/g/n WLAN PC card and access point applications as transmit/receive switch, antenna diversity switch, or band-selection switch.

Electrical Specifications at 25°C with 0, +3V Control Voltages

Parameter	Test Conditions	Min.	Typ.	Max.	Unit
Insertion Loss	2.0-3.0 GHz 3.0-6.0 GHz		0.35 0.55	0.50 0.70	dB dB
Isolation	2.0-3.0 GHz 3.0-6.0 GHz	24.0 22.0	27.0 25.0		dB dB
Return Loss	2.0-3.0 GHz 3.0-6.0 GHz		20.0 15.0		dB dB
Input Power for 0.5 dB Compression	2.5 GHz @0/+1.8V @0/+3.0V		 25 31		 dBm dBm
Input Third Order Intercept Point	20 dBm Per Tone, 2.50 GHz @+3V		 50		 dBm
Switching Time	10% to 90%, 90% to 10% RF		80		nsec
Control Current			2		uA

Note: All measurements made in a 50 ohm system with 0/+3.0V control voltages, unless otherwise specified.

Typical Performance Data with 8pF Capacitors @ +25°C

Return Loss vs. Frequency

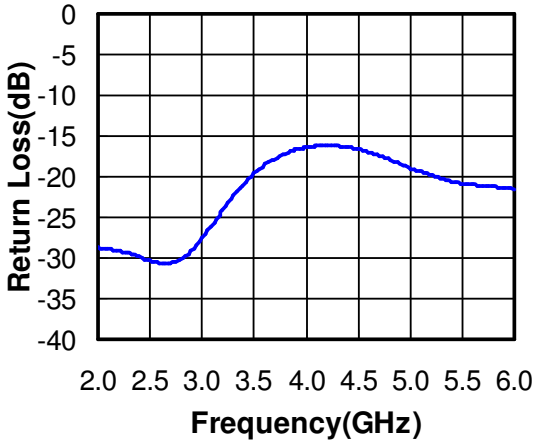

Insertion Loss vs. Frequency

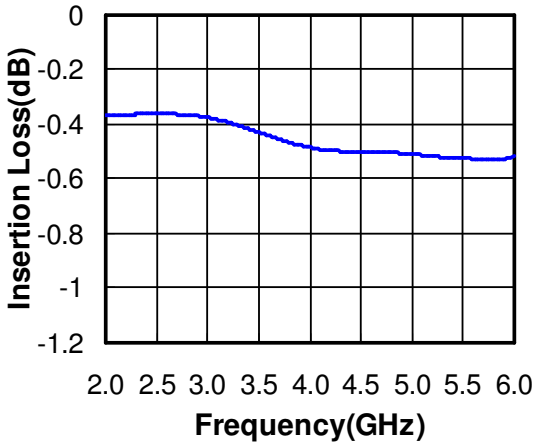

Isolation vs. Frequency

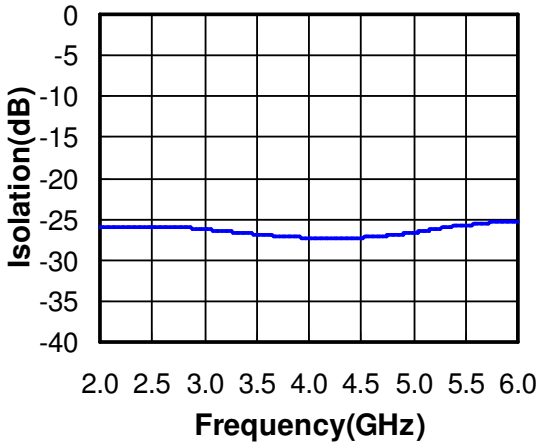

Absolute Maximum Ratings

Parameter	Absolute Maximum
RF Input Power	+33 dBm @ +3V
Control Voltage	+6V
Operating Temperature	-40°C to +85°C
Storage Temperature	-65°C to +150°C
Electrostatic Discharge Machine Model	Class M1

Pin Out (Top View)

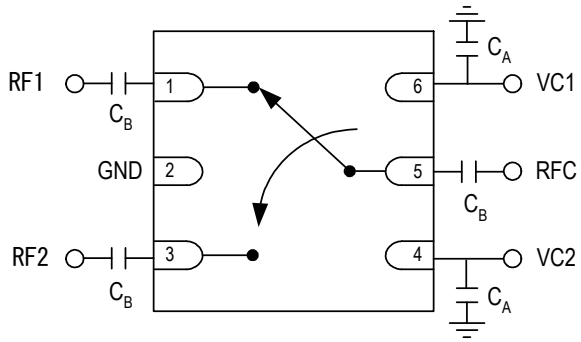

Note:

1. DC blocking capacitors C_B=8pF are required on all RF ports.
2. RF by-pass capacitors C_A=8pF.
3. Exposed pad in the bottom must be connected to ground by via holes.

Logic Table for Switch On-Path

VC1	VC2	RFC-RF1	RFC-RF2
1	0	Off	On
0	1	On	Off

'1' = +1.8V to +5V
'0' = 0V to +0.2V